EduSahara™ Assignment

Name : Angle Value Problems

Chapter : Angles

Grade : ICSE Grade VI

License : Non Commercial Use

1. Find the value of 'h' in the following figure

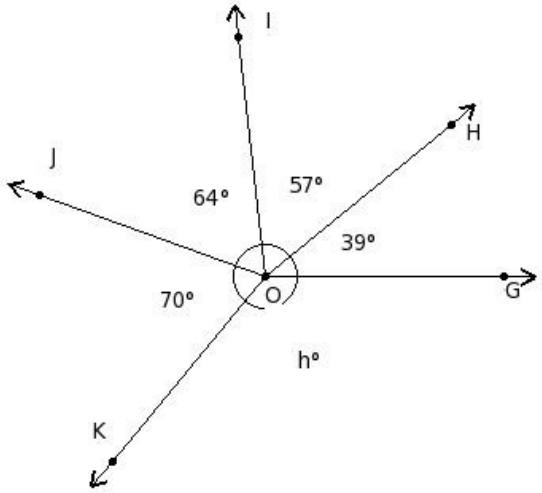

(i) 135° (ii) 145° (iii) 130° (iv) 140° (v) 160°

2. The complementary angle of $21°$ is

(i) 84° (ii) 99° (iii) 74° (iv) 69° (v) 79°

3. The supplementary angle of $169°$ is

(i) 26° (ii) 41° (iii) 11° (iv) 16° (v) 21°

4. Which of the following angles form a linear pair?

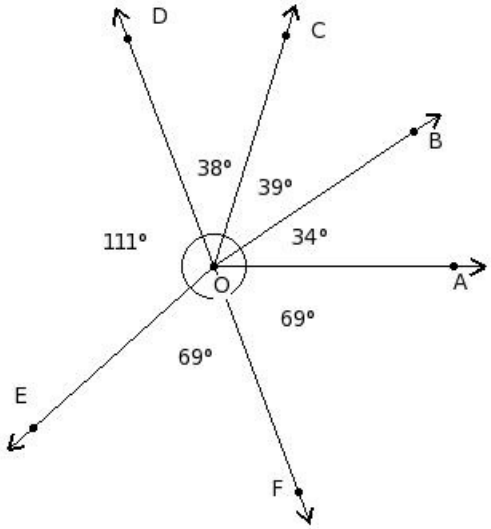

(i) $(\angle EOF, \angle FOA)$ (ii) $(\angle BOC, \angle COD)$ (iii) $(\angle COD, \angle DOE)$ (iv) $(\angle DOE, \angle EOF)$ (v) $(\angle AOB, \angle BOC)$

5. Find the value of 'd' in the following figure

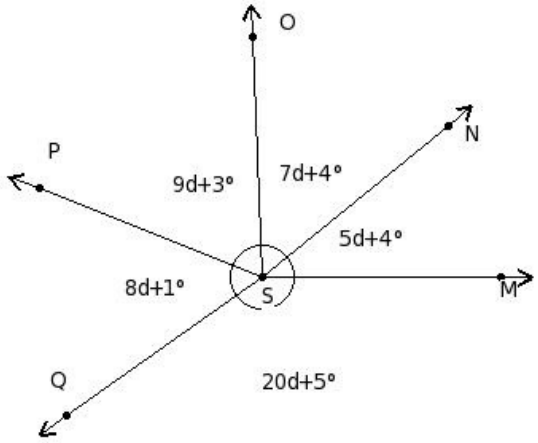

(i) 6 (ii) 4 (iii) 8 (iv) 9 (v) 7

6. Which of the following is an acute angle?

(i) 258° (ii) 145° (iii) 59° (iv) 360° (v) 180°

7. Which of the following is an obtuse angle?

(i) 0° (ii) 90° (iii) 180° (iv) 291° (v) 127°

8. Which of the following is a right angle?

(i) 90° (ii) 334° (iii) 0° (iv) 66° (v) 360°

9. Which of the following is a straight angle?

(i) 0° (ii) 180° (iii) 83° (iv) 290° (v) 90°

10. Which of the following is a complete angle?

(i) 196° (ii) 130° (iii) 76° (iv) 0° (v) 360°

11. Which of the following is a zero angle?

(i) 161° (ii) 360° (iii) 180° (iv) 28° (v) 0°

12. Which of the following is a reflex angle?

(i) 212° (ii) 119° (iii) 90° (iv) 0° (v) 360°

13. Add 30° 7' 33" and 7° 37' 47"

(i) 37° 45' 20" (ii) 37° 45' 30" (iii) 37° 55' 20" (iv) 22° 35' 20" (v) 47° 45' 20"

14. Subtract 2° 59' 34" from 57° 39' 9"

(i) 54° 39' 45" (ii) 54° 39' 35" (iii) 54° 49' 35" (iv) 39° 29' 35" (v) 64° 39' 35"

15. Find the complementary angle of 11° 27' 35"

(i) 78° 32' 25" (ii) 78° 42' 25" (iii) 88° 32' 25" (iv) 63° 22' 25" (v) 78° 32' 35"

16. Find the supplementary angle of 43° 29"

(i) 137° 9' 31" (ii) 136° 59' 41" (iii) 136° 59' 31" (iv) 121° 49' 31" (v) 146° 59' 31"

17. Find the value of h in the figure below

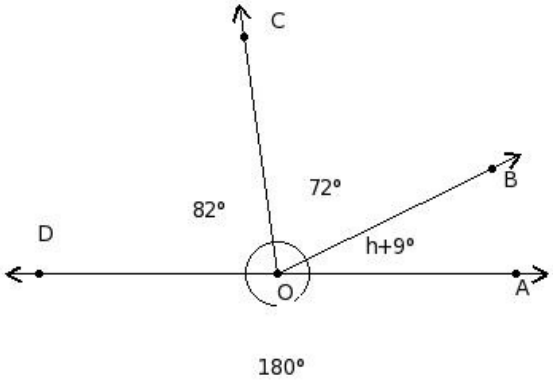

(i) 16 (ii) 15 (iii) 17 (iv) 18 (v) 19

Assignment Key

1) (iii)	2) (iv)	3) (iii)	4) (iv)	5) (v)	6) (iii)
7) (v)	8) (i)	9) (ii)	10) (v)	11) (v)	12) (i)
13) (i)	14) (ii)	15) (i)	16) (iii)	17) (iii)	

Copyright © Small Systems Computing Pvt. Ltd.