EduSahara™ Assignment

Name : Perimeter and Area of Complex Shaped Figures - 2

Chapter : Perimeter and Area of Plane Figures

Grade : ICSE Grade VIII

License : Non Commercial Use

1. Find the area of the shaded region given below

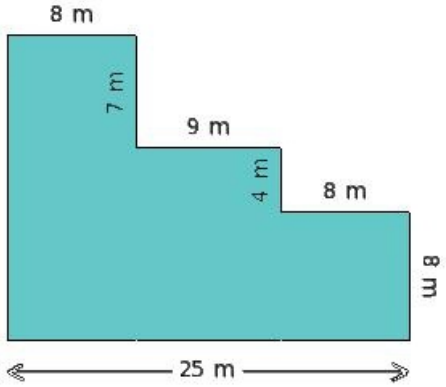

(i) 329.00 sq.m (ii) 324.00 sq.m (iii) 337.00 sq.m (iv) 306.00 sq.m (v) 302.00 sq.m

2. Find the perimeter of the shaded region given below

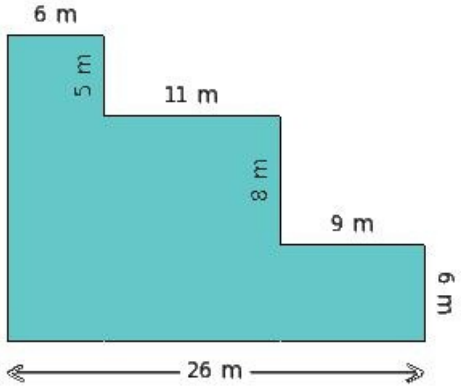

(i) 85.00 m (ii) 90.00 m (iii) 95.00 m (iv) 93.00 m (v) 87.00 m

3. Find the area of the shaded region given below

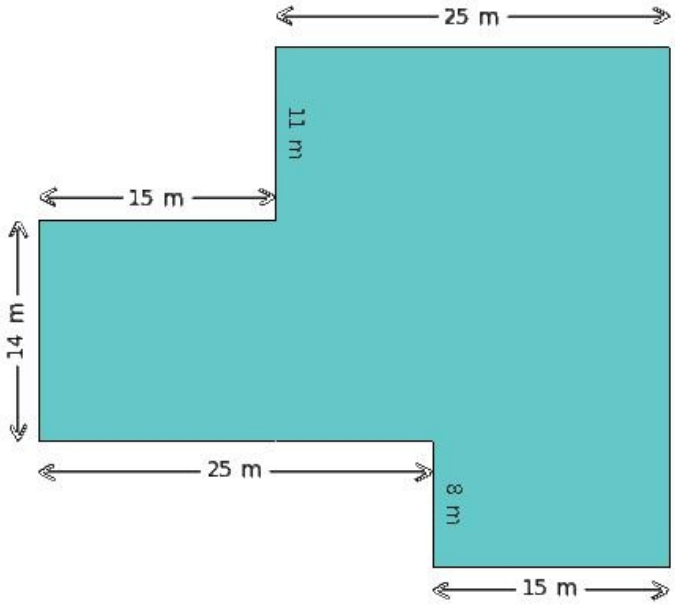

(i) 949.00 sq.m (ii) 929.00 sq.m (iii) 955.00 sq.m (iv) 968.00 sq.m (v) 970.00 sq.m

4. Find the perimeter of the shaded region given below

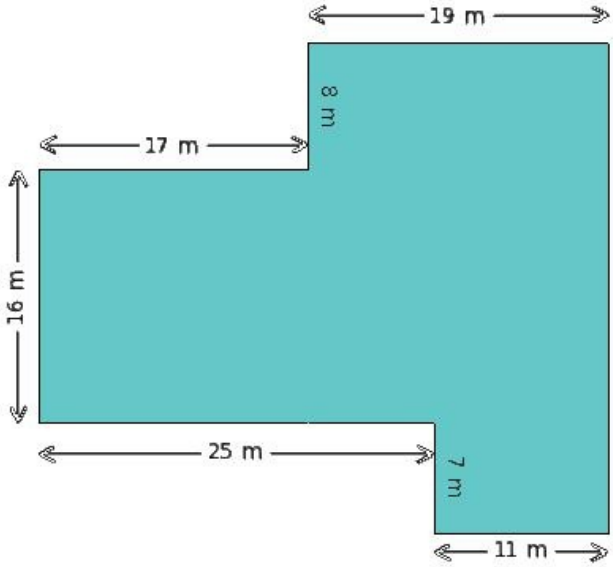

(i) 110.00 m (ii) 134.00 m (iii) 119.00 m (iv) 146.00 m (v) 137.00 m

5. Find the area of the shaded region given below

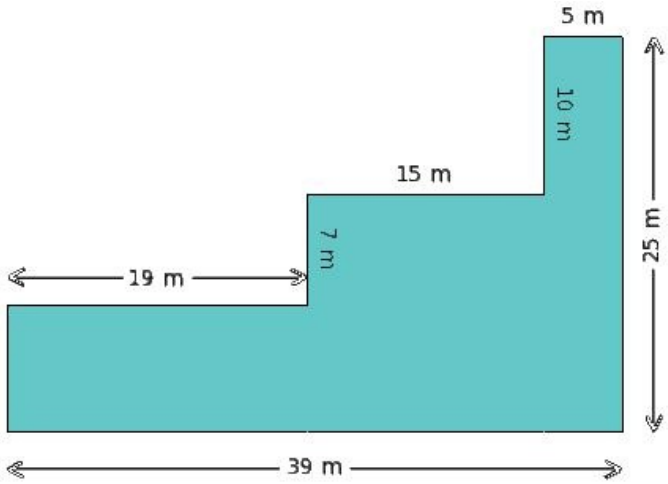

(i) 502.00 sq.m (ii) 514.00 sq.m (iii) 486.00 sq.m (iv) 489.00 sq.m (v) 527.00 sq.m

6. Find the perimeter of the shaded region given below

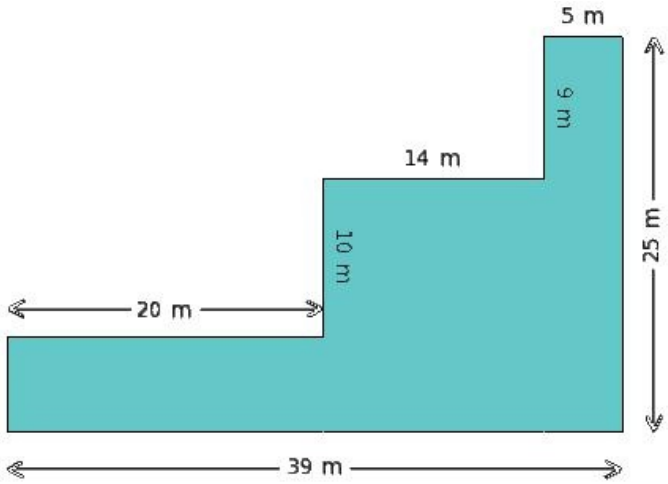

(i) 128.00 m (ii) 112.00 m (iii) 140.00 m (iv) 121.00 m (v) 132.00 m

7. Find the area of the shaded region given below

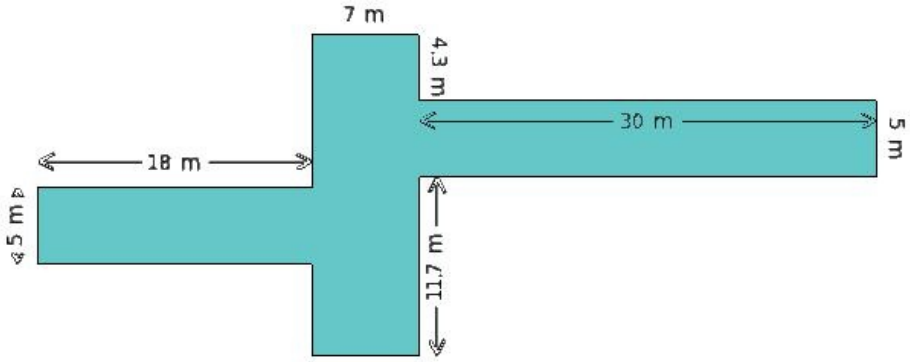

(i) 400.00 sq.m (ii) 387.00 sq.m (iii) 372.00 sq.m (iv) 371.00 sq.m

8. Find the perimeter of the shaded region given below

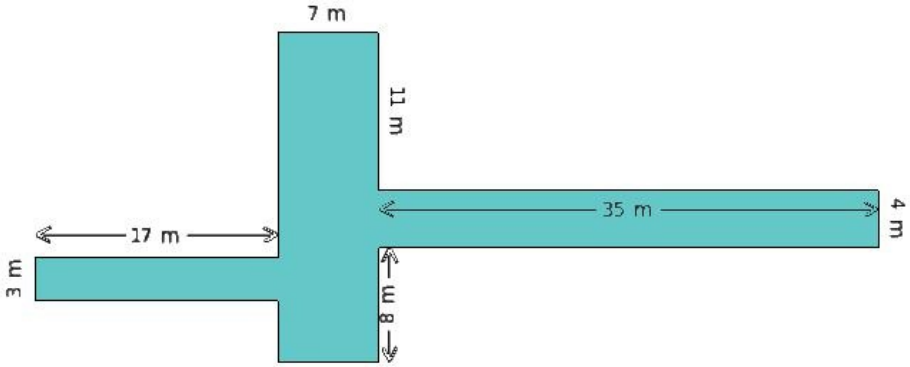

(i) 190.00 m (ii) 171.00 m (iii) 146.00 m (iv) 137.00 m (v) 164.00 m

9. Find the area of the shaded region given below

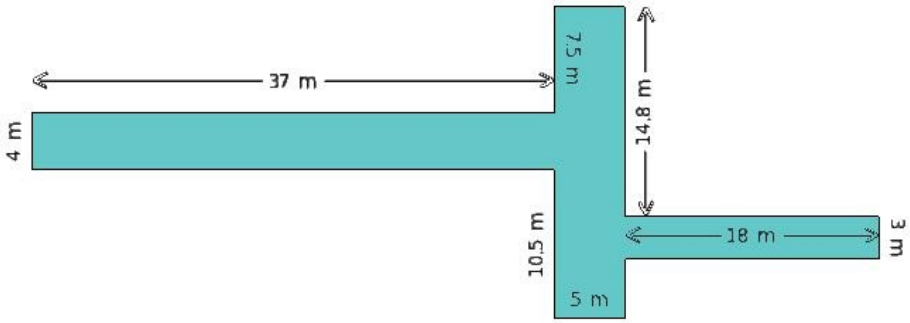

(i) 330.00 sq.m (ii) 296.00 sq.m (iii) 299.00 sq.m (iv) 329.00 sq.m (v) 312.00 sq.m

10. Find the perimeter of the shaded region given below

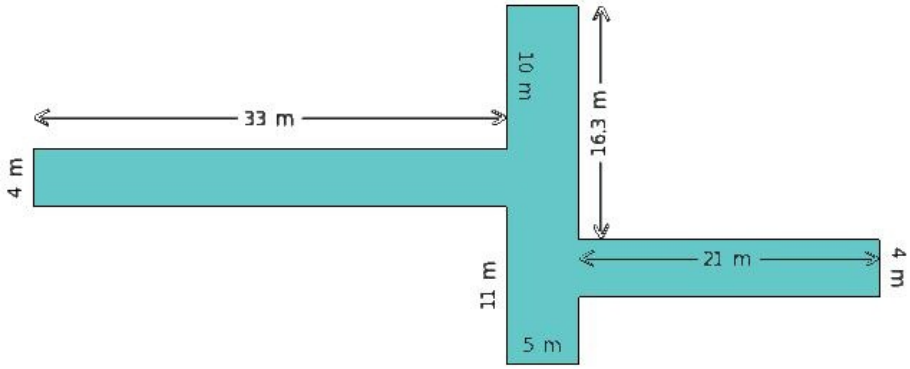

(i) 196.00 m (ii) 168.00 m (iii) 151.00 m (iv) 164.00 m (v) 176.00 m

11. Find the area of the shaded region given below

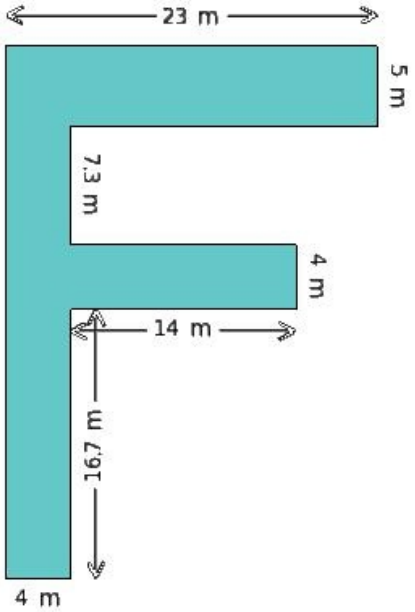

(i) 271.00 sq.m (ii) 301.00 sq.m (iii) 298.00 sq.m (iv) 266.00 sq.m (v) 283.00 sq.m

12. Find the perimeter of the shaded region given below

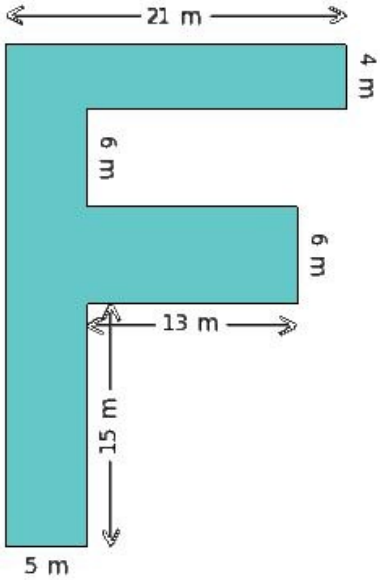

(i) 158.00 m (ii) 136.00 m (iii) 113.00 m (iv) 127.00 m (v) 130.00 m

13. Find the area of the shaded region given below

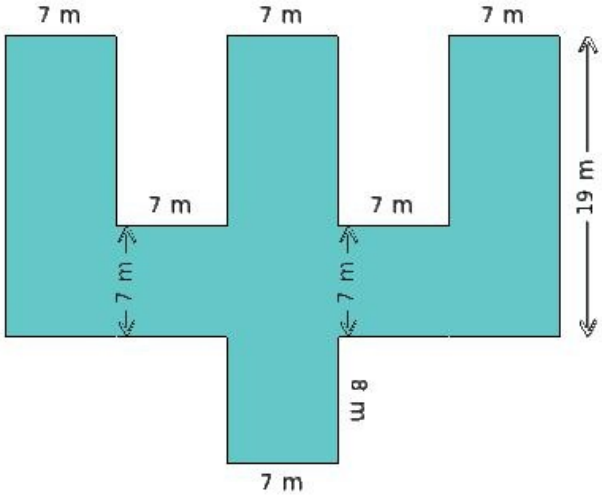

(i) 536.00 sq.m (ii) 571.00 sq.m (iii) 575.00 sq.m (iv) 538.00 sq.m (v) 553.00 sq.m

14. Find the perimeter of the shaded region given below

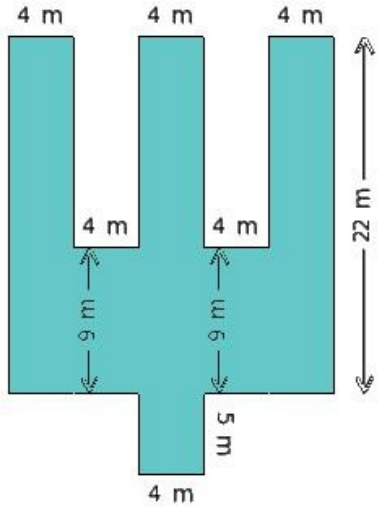

(i) 146.00 m (ii) 123.00 m (iii) 160.00 m (iv) 129.00 m (v) 172.00 m

15. Find the area of the shaded region given below

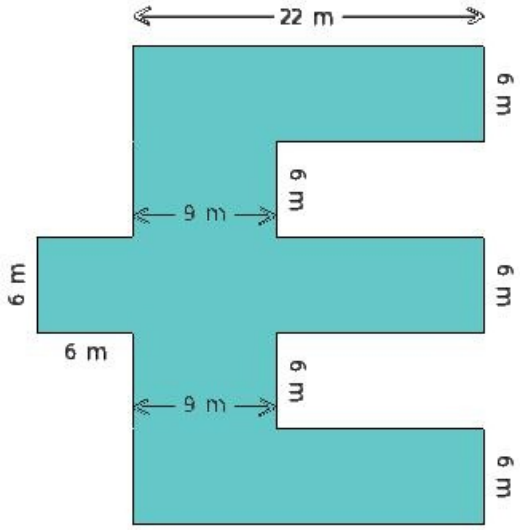

(i) 518.00 sq.m (ii) 565.00 sq.m (iii) 558.00 sq.m (iv) 536.00 sq.m (v) 540.00 sq.m

16. Find the perimeter of the shaded region given below

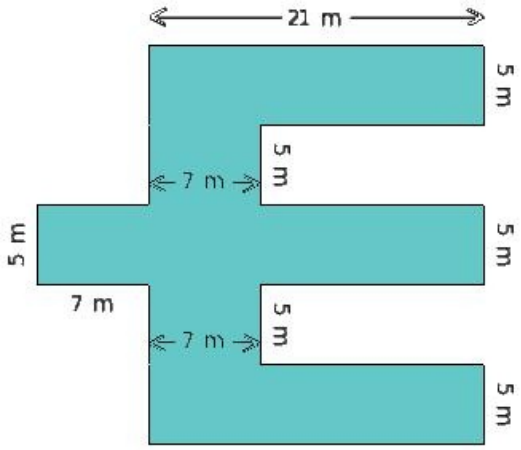

(i) 150.00 m (ii) 162.00 m (iii) 184.00 m (iv) 177.00 m (v) 158.00 m

17. Find the area of the shaded region given below

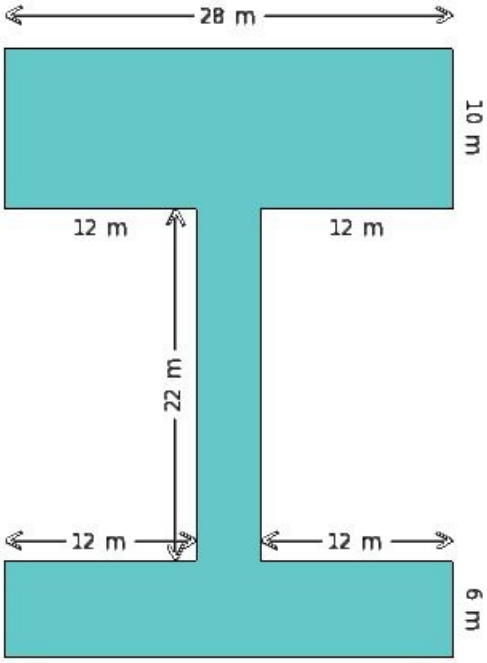

(i) 560.00 sq.m (ii) 539.00 sq.m (iii) 522.00 sq.m (iv) 536.00 sq.m (v) 531.00 sq.m

18. Find the perimeter of the shaded region given below

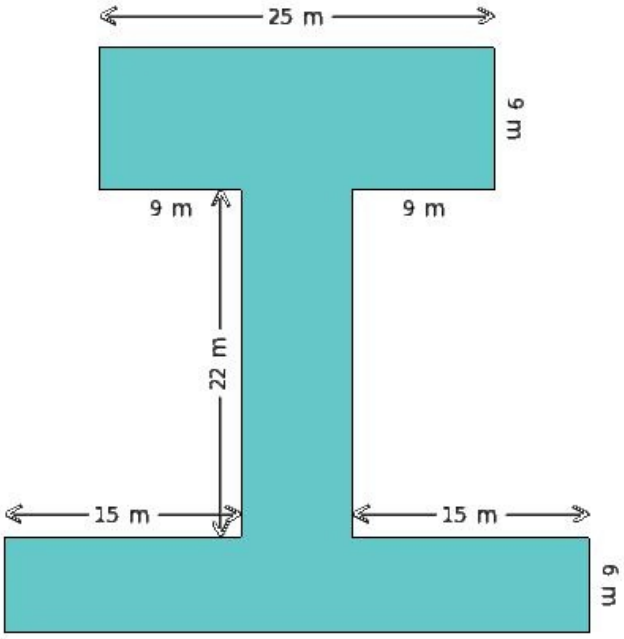

(i) 208.00 m (ii) 189.00 m (iii) 167.00 m (iv) 166.00 m (v) 184.00 m

19. A rectangular field is 37 m by 28 m. It has two paths through its centre, running parallel to its sides. The width of the longer and the shorter paths are 14 m and 9 m respectively. Find the total expense involved in laying tiles on the paths at ₹21.3 per 1 sq.m and laying grass in the remaining portion at ₹27.3 per 1 sq.m.

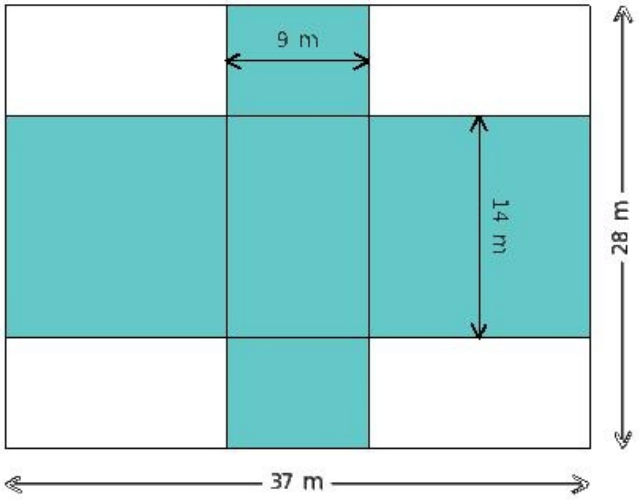

(i) ₹24416.80 (ii) ₹24419.80 (iii) ₹24418.80 (iv) ₹24417.80 (v) ₹24420.80

20. In the given figure, BCDE is a rectangle in which BC = 12 cm and EB = 23 cm. Also, △RDE is a right angled triangle in which ∠ERD = 90° and RD = 7 cm Find the area of the shaded region

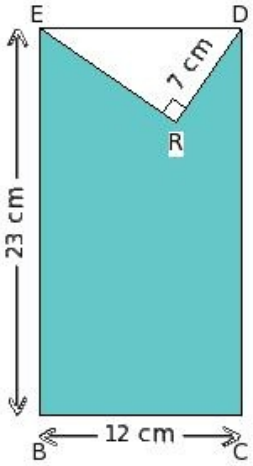

(i) 243.89 sq.cm (ii) 241.89 sq.cm (iii) 239.89 sq.cm (iv) 242.89 sq.cm (v) 240.89 sq.cm

21. In the given figure, DEFG is a rectangle in which DE = 12 cm and GD = 28 cm.
Also, △QDE and △RFG are the right angled triangles in which ∠EQD = ∠GRF = 90°, QD = 8 cm and RF = 7 cm.
Find the area of the shaded region

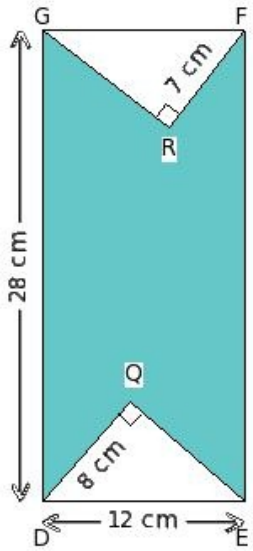

(i) 264.11 sq.cm (ii) 265.11 sq.cm (iii) 266.11 sq.cm (iv) 267.11 sq.cm (v) 268.11 sq.cm

22. Find the area of shaded region in the adjoining figure, given that DE = 12 cm, EF = 27 cm, DG = 9 cm and ∠GDE = ∠DEF = 90°.

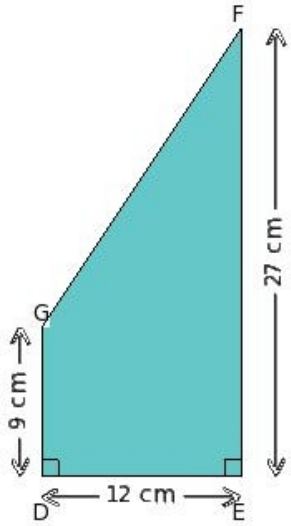

(i) 214.00 sq.cm (ii) 217.00 sq.cm (iii) 218.00 sq.cm (iv) 215.00 sq.cm (v) 216.00 sq.cm

23. Find the area of shaded region in the adjoining figure, given that BC = 14 cm, CD = 27 cm, BE = 18 cm and ∠EBC = ∠BCD = 90°.

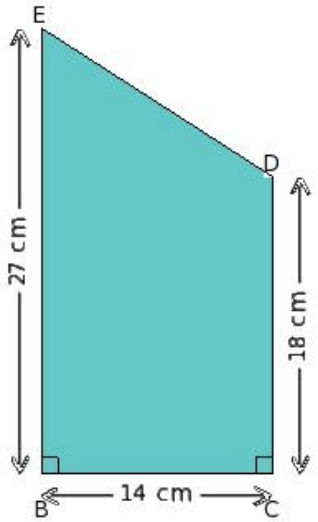

(i) 314.00 sq.cm (ii) 317.00 sq.cm (iii) 313.00 sq.cm (iv) 316.00 sq.cm (v) 315.00 sq.cm

24. Find the area of the shaded region of the adjoining figure, given that ∠HCD = ∠EDC = 90°, GF ∥ CD ∥ HE, GI ⊥ HE, FJ ⊥ HE, HI = JE, CD = 30 cm, CH = 12 cm, GF = 16 cm and distance between CD and GF is 19 cm

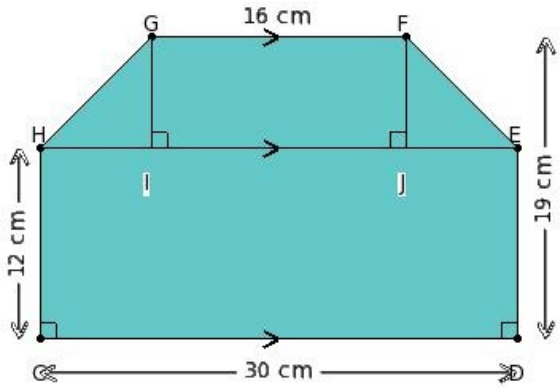

(i) 520.00 sq.cm (ii) 522.00 sq.cm (iii) 521.00 sq.cm (iv) 523.00 sq.cm (v) 519.00 sq.cm

25. Find the area of the shaded region in the adjoining figure, given that BCDE is a square of side 15 cm, DF = 8 cm, GB = 8 cm and CH = 10 cm

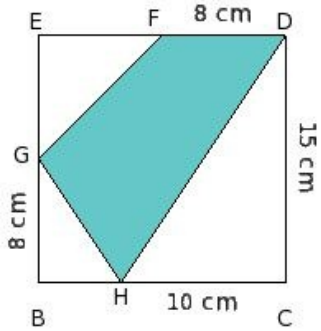

(i) 104.50 sq.cm (ii) 105.50 sq.cm (iii) 107.50 sq.cm (iv) 106.50 sq.cm (v) 103.50 sq.cm

26. Find the area of the shaded region

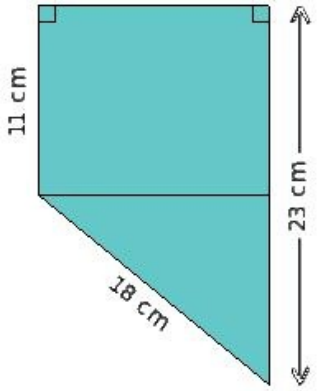

(i) 226.08 sq.cm (ii) 228.08 sq.cm (iii) 229.08 sq.cm (iv) 227.08 sq.cm (v) 230.08 sq.cm

27. Find the area of the shaded region

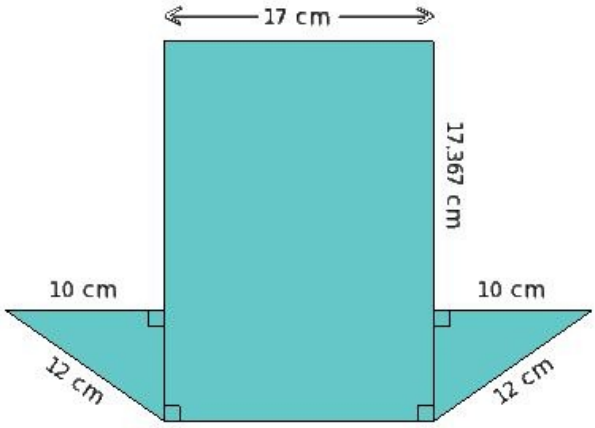

(i) 472.33 sq.cm (ii) 475.33 sq.cm (iii) 474.33 sq.cm (iv) 476.33 sq.cm (v) 473.33 sq.cm

28. Find the area of the shaded region

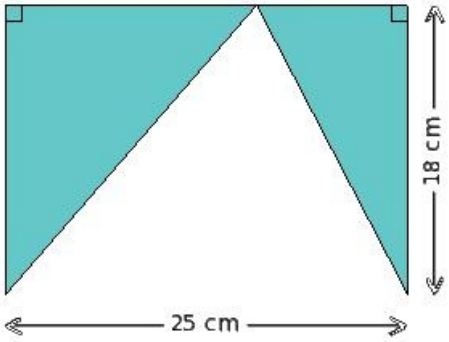

(i) 223.00 sq.cm (ii) 226.00 sq.cm (iii) 227.00 sq.cm (iv) 224.00 sq.cm (v) 225.00 sq.cm

29. Find the area of the shaded region

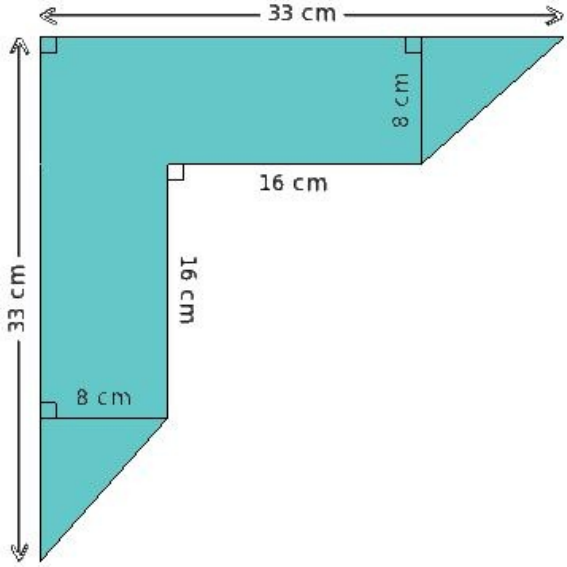

(i) 391.00 sq.cm (ii) 390.00 sq.cm (iii) 394.00 sq.cm (iv) 393.00 sq.cm (v) 392.00 sq.cm

30. Find the area of the shaded region

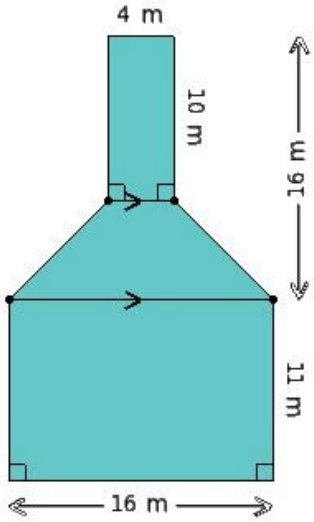

(i) 278.00 sq.m (ii) 274.00 sq.m (iii) 275.00 sq.m (iv) 277.00 sq.m (v) 276.00 sq.m

31. Find the area of the shaded region

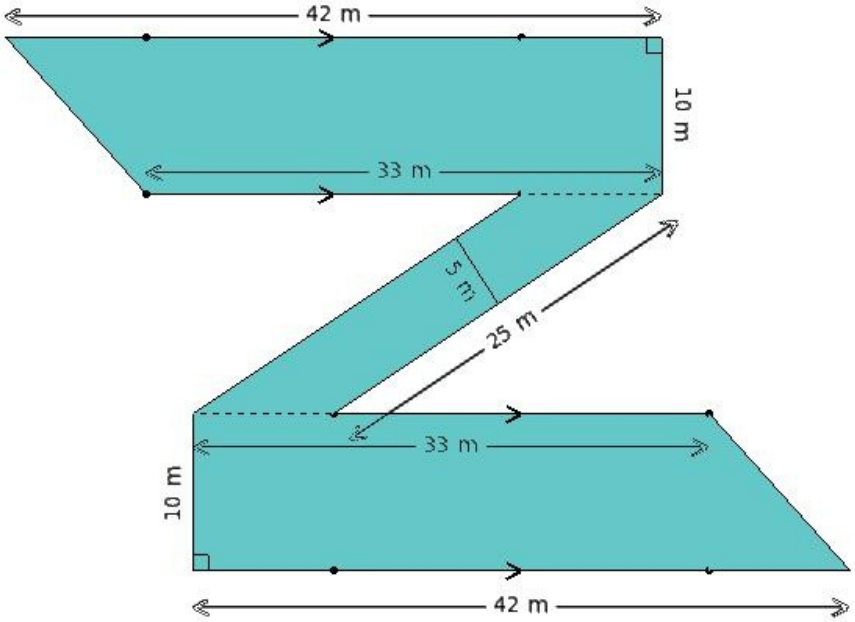

(i) 876.00 sq.m (ii) 873.00 sq.m (iii) 874.00 sq.m (iv) 875.00 sq.m (v) 877.00 sq.m

Assignment Key

1) (ii)	2) (ii)	3) (iii)	4) (ii)	5) (i)	6) (i)
7) (ii)	8) (v)	9) (v)	10) (ii)	11) (v)	12) (v)
13) (v)	14) (i)	15) (v)	16) (ii)	17) (iv)	18) (v)
19) (iii)	20) (ii)	21) (iii)	22) (v)	23) (v)	24) (iii)
25) (ii)	26) (ii)	27) (iii)	28) (v)	29) (v)	30) (v)
31) (iv)					

Copyright © Small Systems Computing Pvt. Ltd.