EduSahara™ Assignment

Name : Perimeter and Area of Complex Shapes

Chapter : Perimeter and Area

Grade : CBSE Grade VII

License : Non Commercial Use

1. In the given figure, the triangle inside the square is an isosceles triangle. Find the area of the shaded region

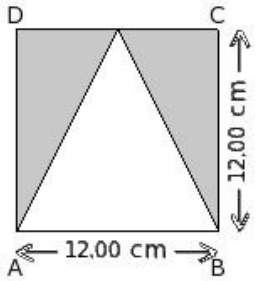

(i) 75.00 sq.cm (ii) 69.00 sq.cm (iii) 67.00 sq.cm (iv) 72.00 sq.cm (v) 77.00 sq.cm

2. In the given figure, find the area of the shaded region

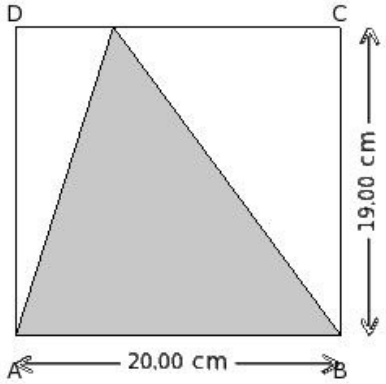

(i) 207.00 sq.cm (ii) 190.00 sq.cm (iii) 206.00 sq.cm (iv) 183.00 sq.cm (v) 175.00 sq.cm

3. In the given figure, find the area of the shaded region

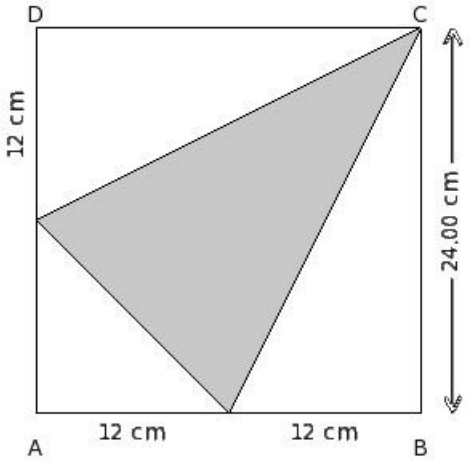

(i) 241.00 sq.cm (ii) 216.00 sq.cm (iii) 224.00 sq.cm (iv) 199.00 sq.cm (v) 202.00 sq.cm

4. Find the area of the shaded region given below

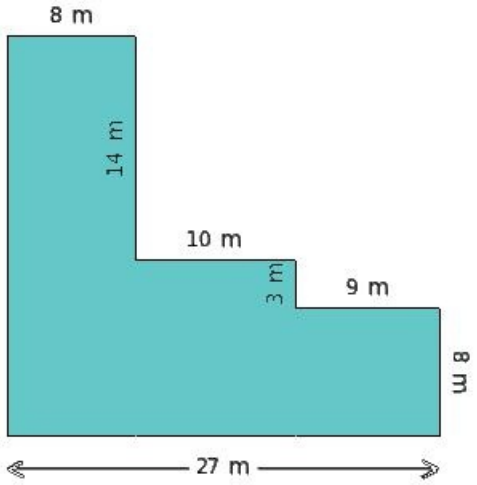

(i) 360.00 sq.m (ii) 399.00 sq.m (iii) 382.00 sq.m (iv) 410.00 sq.m (v) 377.00 sq.m

5. Find the area of the shaded region given below

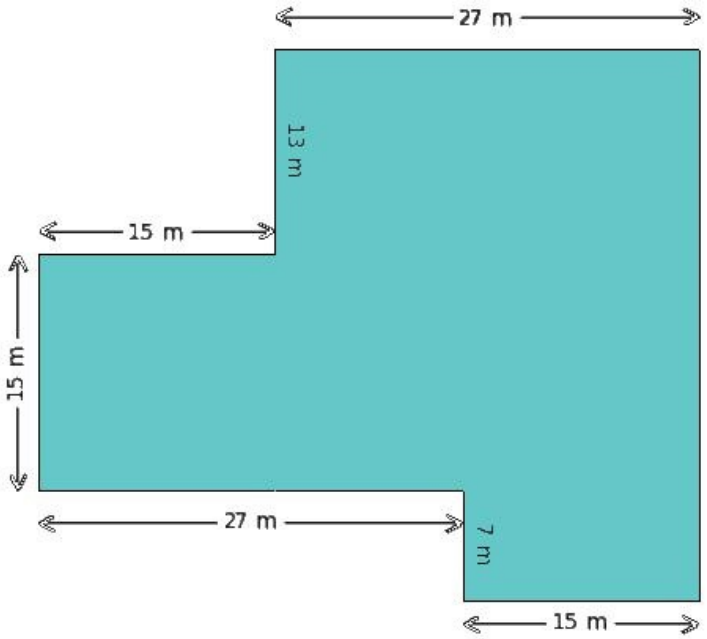

(i) 906.00 sq.m (ii) 1086.00 sq.m (iii) 1326.00 sq.m (iv) 1216.00 sq.m (v) 946.00 sq.m

6. Find the area of the shaded region given below

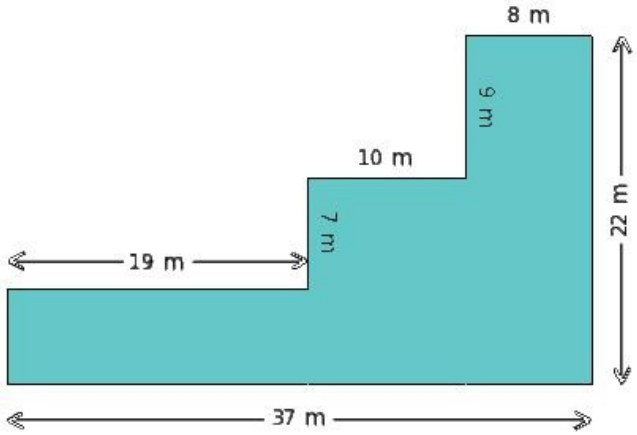

(i) 422.00 sq.m (ii) 446.00 sq.m (iii) 420.00 sq.m (iv) 403.00 sq.m (v) 404.00 sq.m

7. Find the area of the shaded region given below

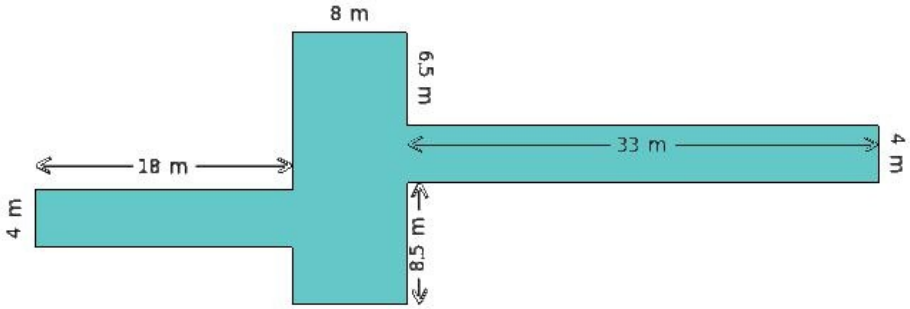

(i) 360.00 sq.m (ii) 372.00 sq.m (iii) 356.00 sq.m (iv) 343.00 sq.m

8. Find the area of the shaded region given below

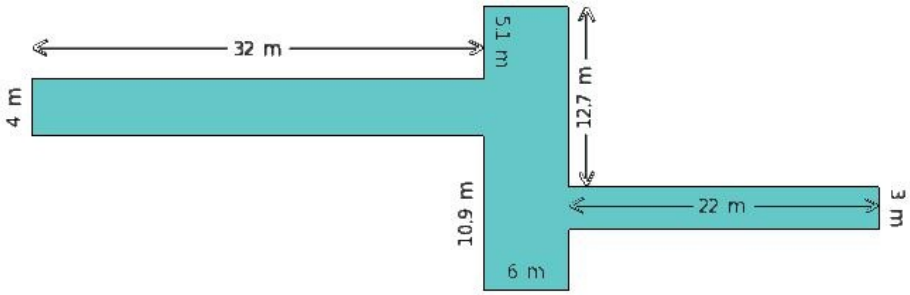

(i) 314.00 sq.m (ii) 302.00 sq.m (iii) 330.00 sq.m (iv) 297.00 sq.m (v) 326.00 sq.m

9. Find the area of the shaded region given below

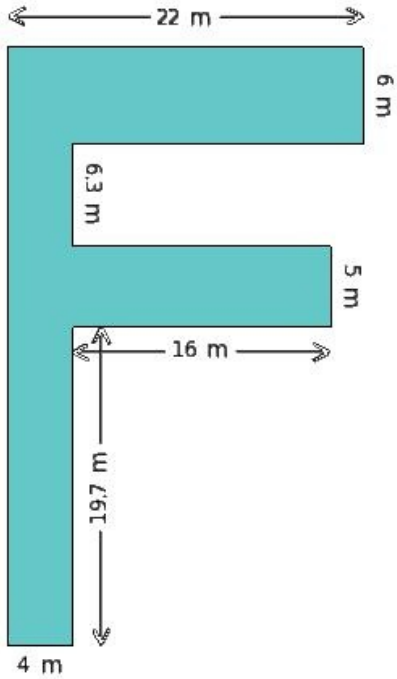

(i) 336.00 sq.m (ii) 360.00 sq.m (iii) 313.00 sq.m (iv) 320.00 sq.m (v) 351.00 sq.m

10. Find the area of the shaded region given below

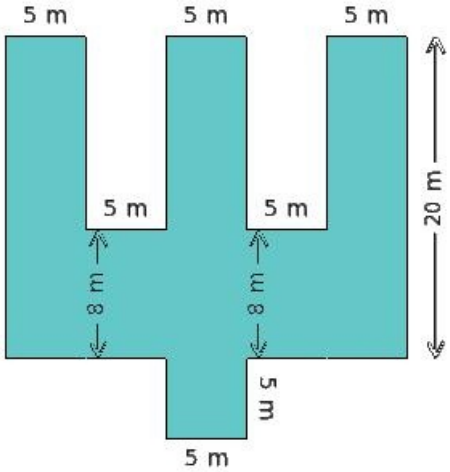

(i) 391.00 sq.m (ii) 392.00 sq.m (iii) 430.00 sq.m (iv) 421.00 sq.m (v) 405.00 sq.m

11. Find the area of the shaded region given below

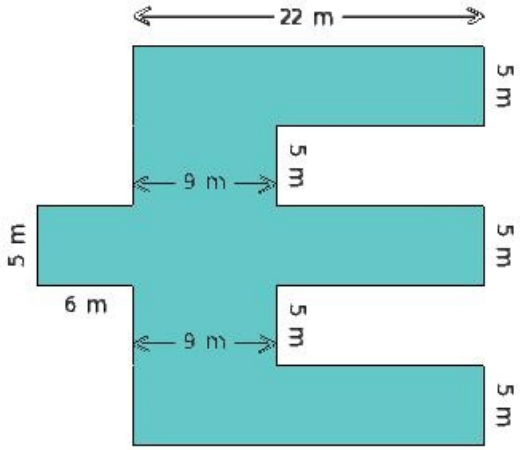

(i) 436.00 sq.m (ii) 450.00 sq.m (iii) 478.00 sq.m (iv) 423.00 sq.m (v) 466.00 sq.m

12. Find the area of the shaded region given below

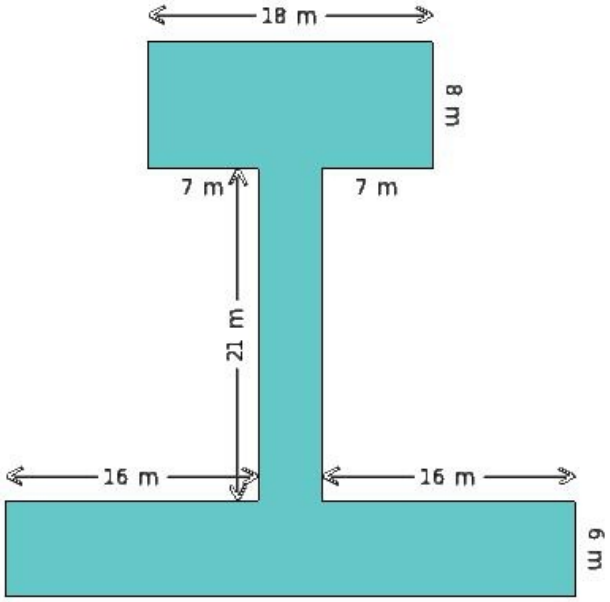

(i) 451.00 sq.m (ii) 429.00 sq.m (iii) 444.00 sq.m (iv) 471.00 sq.m (v) 440.00 sq.m

13. A rectangular field is 41 m by 30 m. It has two paths through its centre, running parallel to its sides. The width of the longer and the shorter paths are 16 m and 17 m respectively. Find the total expense involved in laying tiles on the paths at ₹25.9 per 1 sq.m and laying grass in the remaining portion at ₹24.4 per 1 sq.m.

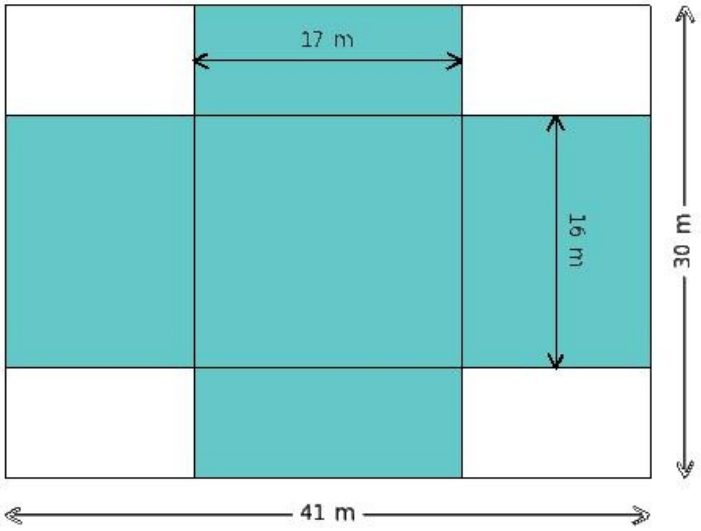

(i) ₹31354.00 (ii) ₹31355.00 (iii) ₹31352.00 (iv) ₹31353.00 (v) ₹31351.00

14. In the given figure, CDEF is a rectangle in which CD = 17 cm and FC = 27 cm. Also, △RCD is a right angled triangle in which ∠DRC = 90° and RC = 14 cm Find the area of the shaded region

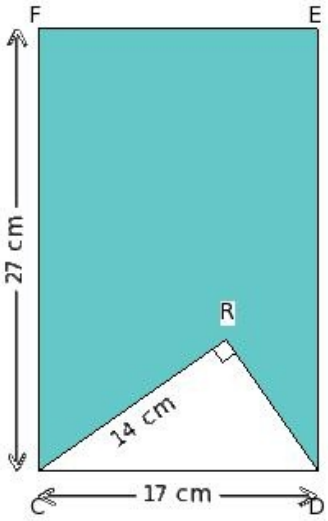

(i) 391.49 sq.cm (ii) 389.49 sq.cm (iii) 393.49 sq.cm (iv) 390.49 sq.cm (v) 392.49 sq.cm

15. In the given figure, EFGH is a rectangle in which EF = 13 cm and HE = 27 cm.
Also, △TEF and △UGH are the right angled triangles in which ∠FTE = ∠HUG = 90°, TE = 9 cm and UG = 8 cm.
Find the area of the shaded region

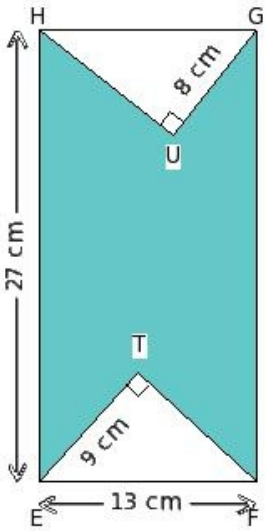

(i) 269.80 sq.cm (ii) 266.80 sq.cm (iii) 268.80 sq.cm (iv) 267.80 sq.cm (v) 265.80 sq.cm

16. Find the area of shaded region in the adjoining figure, given that BC = 14 cm, CD = 25 cm, BE = 14 cm and ∠EBC = ∠BCD = 90°.

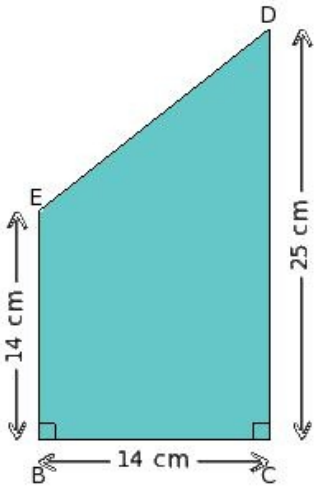

(i) 272.00 sq.cm (ii) 274.00 sq.cm (iii) 275.00 sq.cm (iv) 273.00 sq.cm (v) 271.00 sq.cm

17. Find the area of shaded region in the adjoining figure, given that AB = 16 cm, BC = 28 cm, AD = 11 cm and ∠DAB = ∠ABC = 90°.

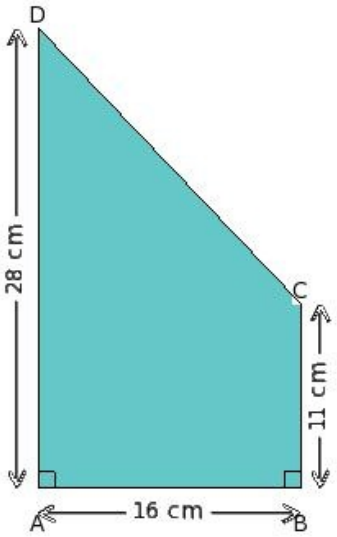

(i) 313.00 sq.cm (ii) 310.00 sq.cm (iii) 312.00 sq.cm (iv) 314.00 sq.cm (v) 311.00 sq.cm

18. Find the area of the shaded region of the adjoining figure, given that ∠HCD = ∠EDC = 90°, GF ∥ CD ∥ HE, GI ⊥ HE, FJ ⊥ HE, HI = JE, CD = 31 cm, CH = 9 cm, GF = 13 cm and distance between CD and GF is 18 cm

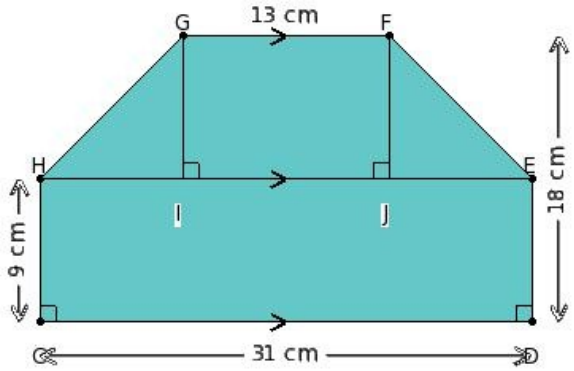

(i) 478.00 sq.cm (ii) 477.00 sq.cm (iii) 475.00 sq.cm (iv) 476.00 sq.cm (v) 479.00 sq.cm

19. Find the area of the shaded region in the adjoining figure, given that BCDE is a square of side 17 cm, DF = 7 cm, GB = 9 cm and CH = 7 cm

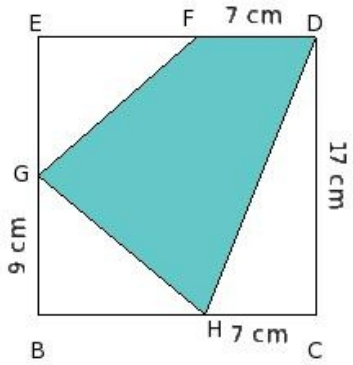

(i) 144.50 sq.cm (ii) 143.50 sq.cm (iii) 142.50 sq.cm (iv) 146.50 sq.cm (v) 145.50 sq.cm

20. Find the area of the shaded region

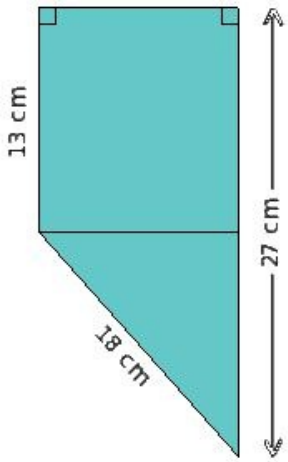

(i) 225.27 sq.cm (ii) 227.27 sq.cm (iii) 224.27 sq.cm (iv) 226.27 sq.cm (v) 228.27 sq.cm

21. Find the area of the shaded region

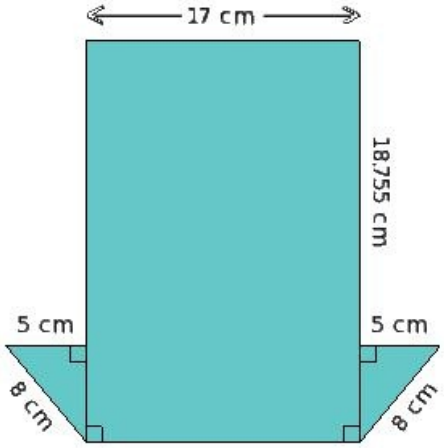

(i) 456.22 sq.cm (ii) 458.22 sq.cm (iii) 457.22 sq.cm (iv) 455.22 sq.cm (v) 454.22 sq.cm

22. Find the area of the shaded region

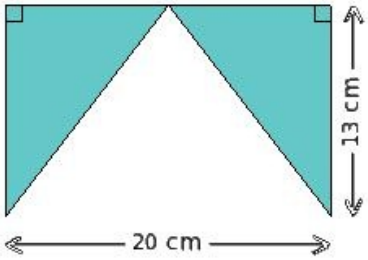

(i) 131.00 sq.cm (ii) 130.00 sq.cm (iii) 128.00 sq.cm (iv) 132.00 sq.cm (v) 129.00 sq.cm

23. Find the area of the shaded region

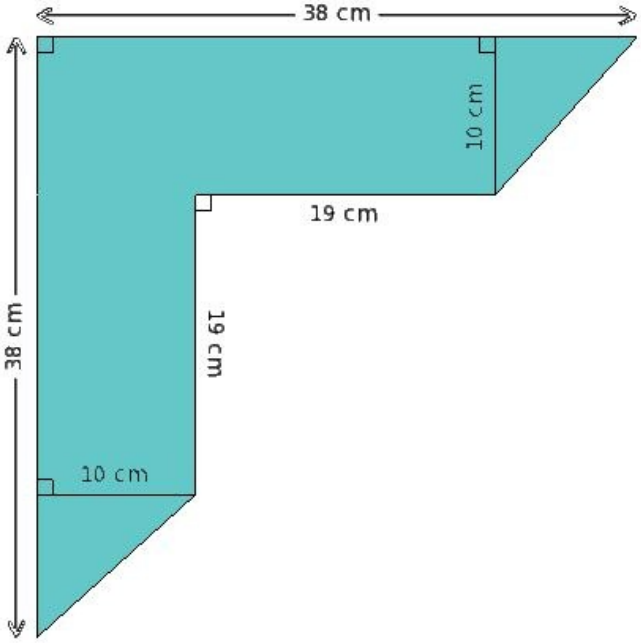

(i) 569.00 sq.cm (ii) 571.00 sq.cm (iii) 570.00 sq.cm (iv) 568.00 sq.cm (v) 572.00 sq.cm

24. Find the perimeter of the shaded region given below

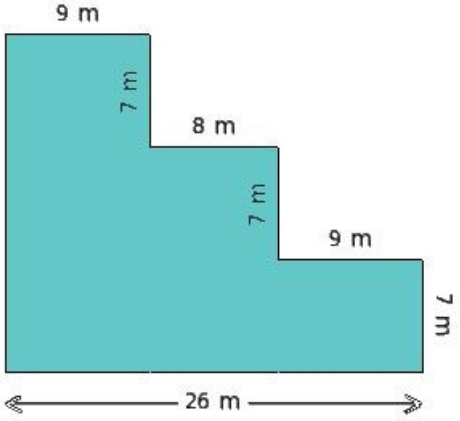

(i) 91.00 m (ii) 97.00 m (iii) 99.00 m (iv) 94.00 m (v) 89.00 m

25. Find the perimeter of the shaded region given below

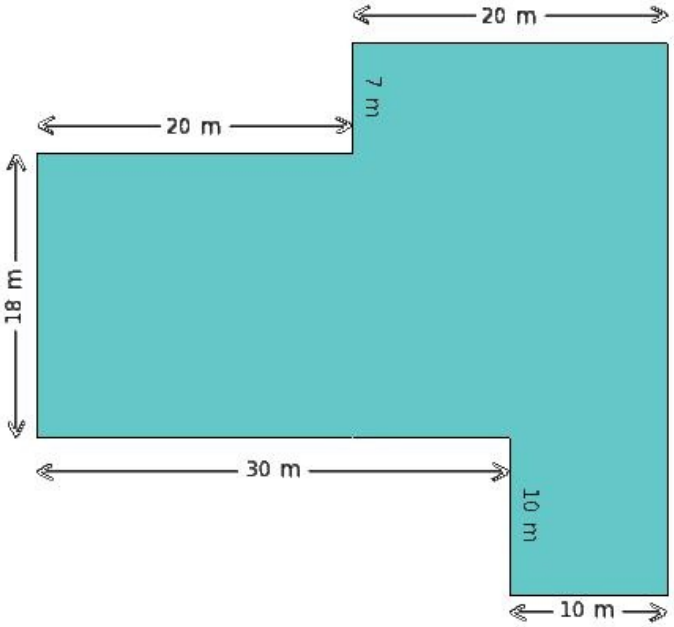

(i) 122.00 m (ii) 176.00 m (iii) 150.00 m (iv) 133.00 m (v) 162.00 m

26. Find the perimeter of the shaded region given below

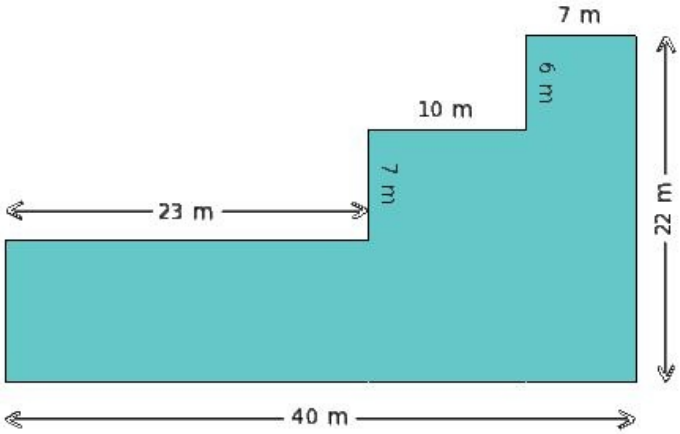

(i) 148.00 m (ii) 98.00 m (iii) 141.00 m (iv) 124.00 m (v) 106.00 m

27. Find the perimeter of the shaded region given below

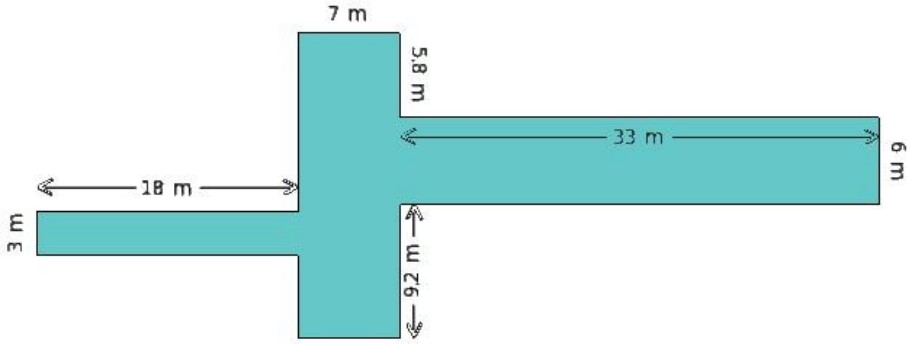

(i) 143.00 m (ii) 151.00 m (iii) 182.00 m (iv) 161.00 m (v) 158.00 m

28. Find the perimeter of the shaded region given below

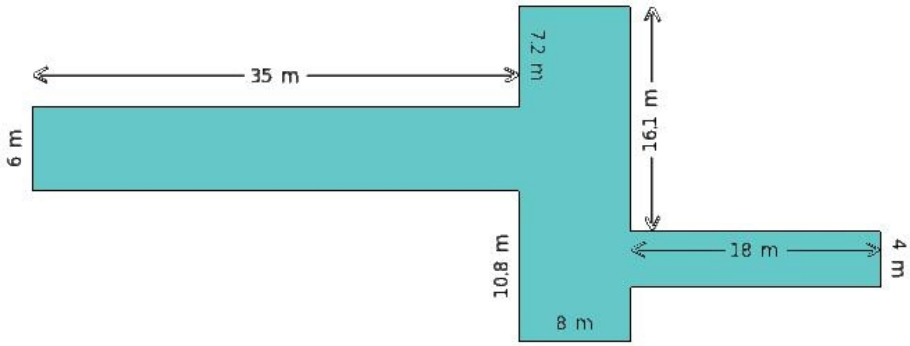

(i) 175.00 m (ii) 170.00 m (iii) 192.00 m (iv) 153.00 m (v) 168.00 m

29. Find the perimeter of the shaded region given below

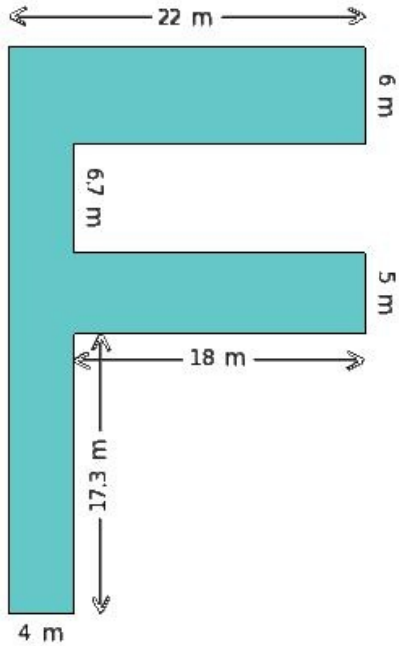

(i) 153.00 m (ii) 125.00 m (iii) 148.00 m (iv) 176.00 m (v) 150.00 m

30. Find the perimeter of the shaded region given below

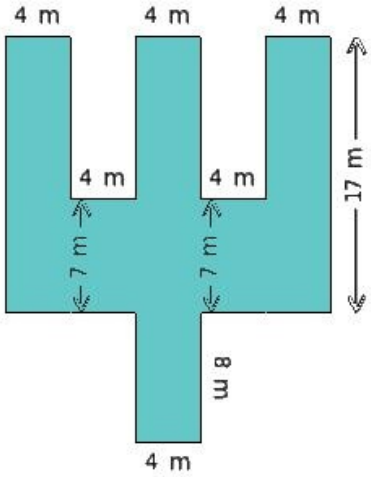

(i) 145.00 m (ii) 137.00 m (iii) 122.00 m (iv) 130.00 m (v) 116.00 m

31. Find the perimeter of the shaded region given below

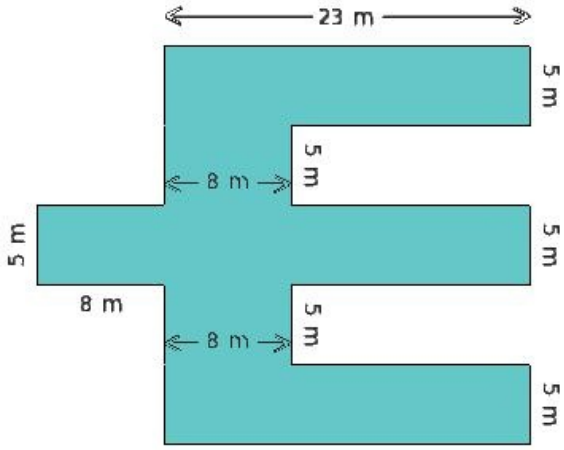

(i) 184.00 m (ii) 172.00 m (iii) 148.00 m (iv) 179.00 m (v) 155.00 m

32. Find the perimeter of the shaded region given below

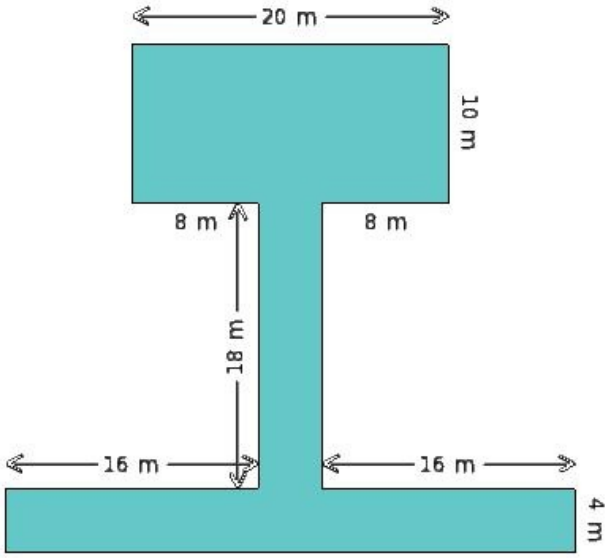

(i) 163.00 m (ii) 156.00 m (iii) 180.00 m (iv) 181.00 m (v) 168.00 m

Assignment Key

1) (iv)	2) (ii)	3) (ii)	4) (iii)	5) (ii)	6) (iii)
7) (iii)	8) (i)	9) (i)	10) (v)	11) (ii)	12) (iii)
13) (iv)	14) (i)	15) (iv)	16) (iv)	17) (iii)	18) (ii)
19) (i)	20) (iv)	21) (i)	22) (ii)	23) (iii)	24) (iv)
25) (iii)	26) (iv)	27) (v)	28) (ii)	29) (v)	30) (iv)
31) (ii)	32) (v)				

Copyright © Small Systems Computing Pvt. Ltd.