EduSahara™ Worksheet

Name : Chapter Based Worksheet

Chapter : Volume and Surface Area of Solids

Grade : ICSE Grade VII

License : Non Commercial Use

1. If the length, height and T.S.A of a cuboid are 16.00 cm, 19.00 cm and 1588.00 sq.cm respectively, its volume is

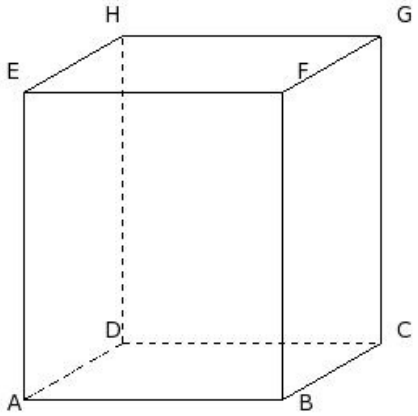

(i) 4256.00 cu.cm (ii) 4226.00 cu.cm (iii) 4416.00 cu.cm (iv) 4536.00 cu.cm (v) 4106.00 cu.cm

2. Find the volume of the given object if each individual cube is 1 cu.cm

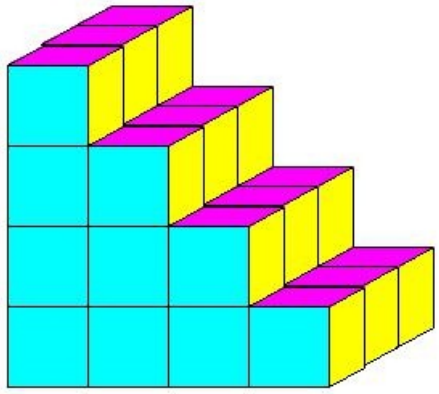

(i) 28 cu.cm (ii) 30 cu.cm (iii) 32 cu.cm (iv) 31 cu.cm (v) 29 cu.cm

3. If the length, height and T.S.A of a cuboid are 13.00 cm, 15.00 cm and 670.00 sq.cm respectively, its breadth is

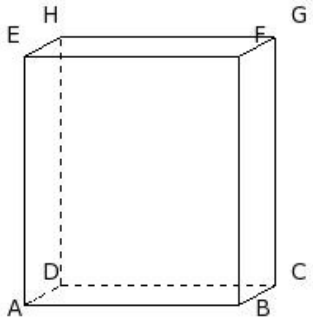

(i) 5.00 cm (ii) 7.00 cm (iii) 6.00 cm (iv) 4.00 cm (v) 3.00 cm

4. Find the volume of the given object if each individual cube is 1 cu.cm

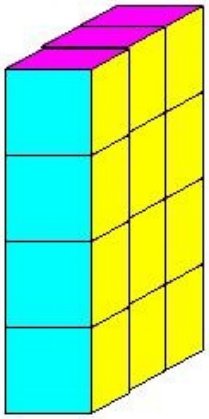

(i) 11 cu.cm (ii) 13 cu.cm (iii) 14 cu.cm (iv) 12 cu.cm (v) 10 cu.cm

5. Find the volume of the given object if each individual cube is 1 cu.cm

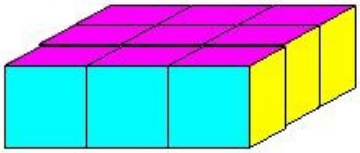

(i) 8 cu.cm (ii) 9 cu.cm (iii) 7 cu.cm (iv) 11 cu.cm (v) 10 cu.cm

6. If the T.S.A of a cube is 1176.00 sq.cm, its L.S.A is

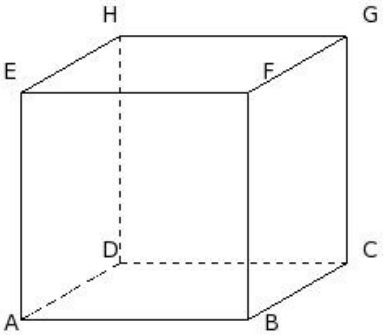

(i) 768.00 sq.cm (ii) 807.00 sq.cm (iii) 800.00 sq.cm (iv) 784.00 sq.cm (v) 782.00 sq.cm

7. If the breadth, height and T.S.A of a cuboid are 16.00 cm, 18.00 cm and 1936.00 sq.cm respectively, its length is

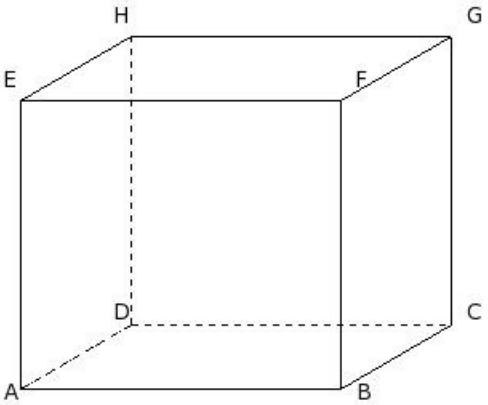

(i) 20.00 cm (ii) 15.00 cm (iii) 23.00 cm (iv) 25.00 cm (v) 17.00 cm

8. If the volume of a cube is 343.00 cu.cm, its L.S.A is

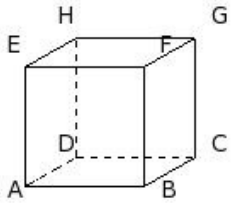

(i) 214.00 sq.cm (ii) 196.00 sq.cm (iii) 189.00 sq.cm (iv) 171.00 sq.cm (v) 209.00 sq.cm

9. Find the volume of the given object if each individual cube is 1 cu.cm

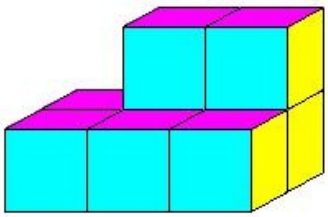

(i) 10 cu.cm (ii) 6 cu.cm (iii) 9 cu.cm (iv) 7 cu.cm (v) 8 cu.cm

10. If the length, breadth and L.S.A of a cuboid are 14.00 cm, 11.00 cm and 1000.00 sq.cm respectively, its height is

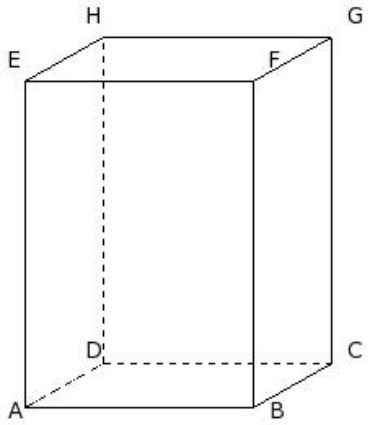

(i) 17.00 cm (ii) 15.00 cm (iii) 20.00 cm (iv) 25.00 cm (v) 23.00 cm

11. Find the volume of the given object if each individual cube is 1 cu.cm

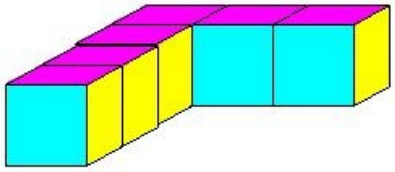

(i) 8 cu.cm (ii) 6 cu.cm (iii) 7 cu.cm (iv) 5 cu.cm (v) 4 cu.cm

12. If the length, height and L.S.A of a cuboid are 18.00 cm, 11.00 cm and 682.00 sq.cm respectively, its breadth is

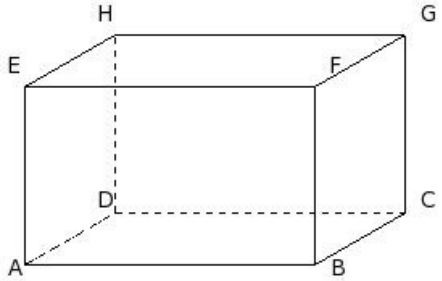

(i) 18.00 cm (ii) 16.00 cm (iii) 13.00 cm (iv) 8.00 cm (v) 10.00 cm

13. If the length, breadth and volume of a cuboid are 13.00 cm, 8.00 cm and 1352.00 cu.cm respectively, its height is

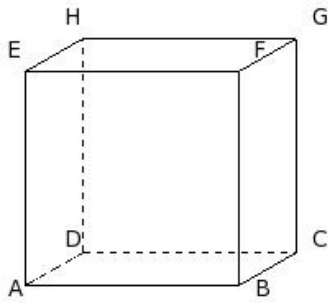

(i) 10.00 cm (ii) 8.00 cm (iii) 13.00 cm (iv) 16.00 cm (v) 18.00 cm

14. If the length, breadth and T.S.A of a cuboid are 17.00 cm, 15.00 cm and 1598.00 sq.cm respectively, its volume is

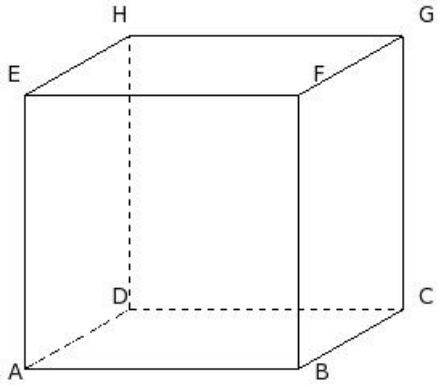

(i) 4105.00 cu.cm (ii) 4305.00 cu.cm (iii) 4335.00 cu.cm (iv) 4475.00 cu.cm (v) 4555.00 cu.cm

15. Find the volume of the given object if each individual cube is 1 cu.cm

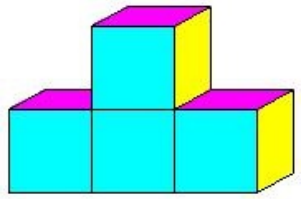

(i) 2 cu.cm (ii) 6 cu.cm (iii) 3 cu.cm (iv) 4 cu.cm (v) 5 cu.cm

16. If the side of a cube is 20.00 cm, its T.S.A is

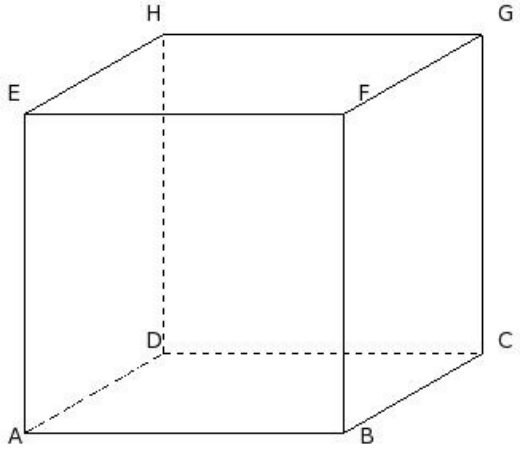

(i) 2450.00 sq.cm (ii) 2230.00 sq.cm (iii) 2400.00 sq.cm (iv) 2680.00 sq.cm (v) 2260.00 sq.cm

17. Find the volume of the given object if each individual cube is 1 cu.cm

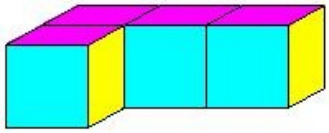

(i) 4 cu.cm (ii) 3 cu.cm (iii) 5 cu.cm (iv) 6 cu.cm (v) 2 cu.cm

18. Find the volume of the given object if each individual cube is 1 cu.cm

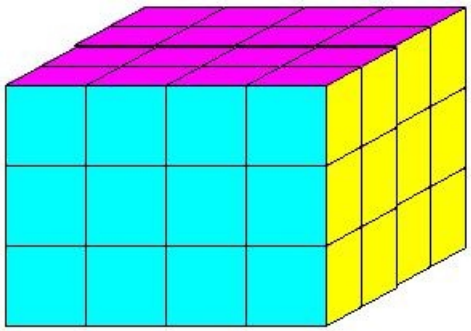

(i) 46 cu.cm (ii) 49 cu.cm (iii) 48 cu.cm (iv) 50 cu.cm (v) 47 cu.cm

19. If the length, breadth and volume of a cuboid are 20.00 cm, 19.00 cm and 6460.00 cu.cm respectively, its T.S.A is

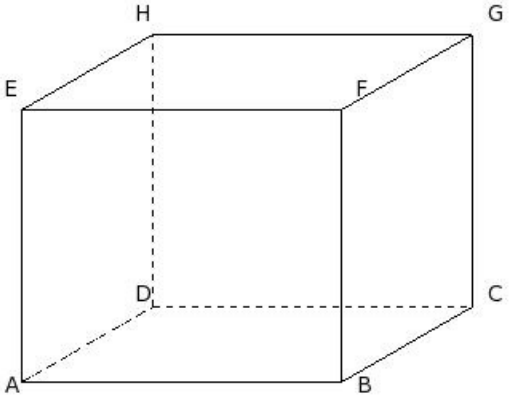

(i) 2086.00 sq.cm (ii) 2236.00 sq.cm (iii) 1926.00 sq.cm (iv) 2126.00 sq.cm (v) 1956.00 sq.cm

20. If the length, height and L.S.A of a cuboid are 12.00 cm, 10.00 cm and 420.00 sq.cm respectively, its volume is

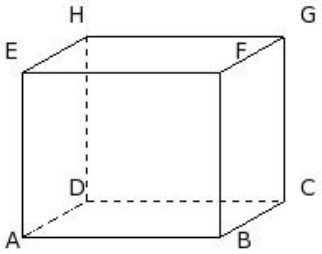

(i) 1140.00 cu.cm (ii) 1200.00 cu.cm (iii) 1080.00 cu.cm (iv) 820.00 cu.cm (v) 1000.00 cu.cm

21. If the length, breadth and height of a cuboid are 18.00 cm, 9.00 cm and 7.00 cm respectively, its L.S.A is

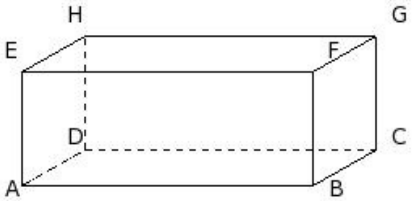

(i) 378.00 sq.cm (ii) 390.00 sq.cm (iii) 355.00 sq.cm (iv) 391.00 sq.cm (v) 373.00 sq.cm

22. If the side of a cube is 8.00 cm, its volume is

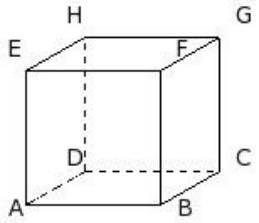

(i) 517.00 cu.cm (ii) 510.00 cu.cm (iii) 498.00 cu.cm (iv) 525.00 cu.cm (v) 512.00 cu.cm

23. If the volume of a cube is 729.00 cu.cm, its T.S.A is

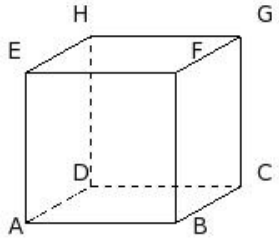

(i) 510.00 sq.cm (ii) 474.00 sq.cm (iii) 486.00 sq.cm (iv) 471.00 sq.cm (v) 498.00 sq.cm

24. If the length, breadth and L.S.A of a cuboid are 16.00 cm, 11.00 cm and 378.00 sq.cm respectively, its T.S.A is

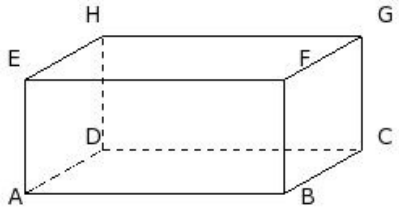

(i) 726.00 sq.cm (ii) 738.00 sq.cm (iii) 747.00 sq.cm (iv) 718.00 sq.cm (v) 730.00 sq.cm

25. If the length, breadth and height of a cuboid are 17.00 cm, 7.00 cm and 16.00 cm respectively, its volume is

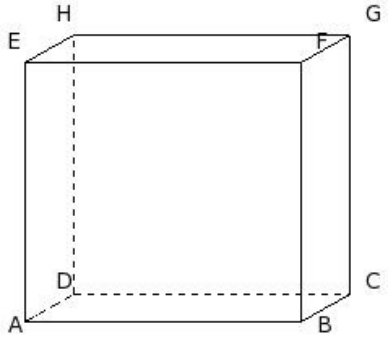

(i) 2084.00 cu.cm (ii) 2074.00 cu.cm (iii) 1904.00 cu.cm (iv) 1764.00 cu.cm (v) 1644.00 cu.cm

Assignment Key

1) (i)	2) (ii)	3) (i)	4) (iv)	5) (ii)	6) (iv)
7) (i)	8) (ii)	9) (v)	10) (iii)	11) (ii)	12) (iii)
13) (iii)	14) (iii)	15) (iv)	16) (iii)	17) (i)	18) (iii)
19) (i)	20) (iii)	21) (i)	22) (v)	23) (iii)	24) (v)
25) (iii)					

Copyright © Small Systems Computing Pvt. Ltd.