EduSahara™ Worksheet

Name : Chapter Based Worksheet

Chapter : Volume and Surface Area of Solids

Grade : ICSE Grade VII

License : Non Commercial Use

1. If the length, height and L.S.A of a cuboid are 16.00 cm, 15.00 cm and 870.00 sq.cm respectively, its T.S.A is

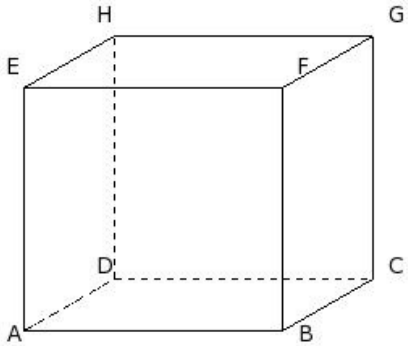

(i) 1286.00 sq.cm (ii) 1316.00 sq.cm (iii) 1526.00 sq.cm (iv) 1106.00 sq.cm (v) 1146.00 sq.cm

2. Find the volume of the given object if each individual cube is 1 cu.cm

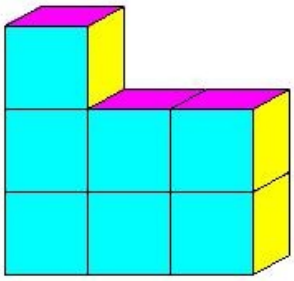

(i) 8 cu.cm (ii) 9 cu.cm (iii) 5 cu.cm (iv) 6 cu.cm (v) 7 cu.cm

3. If the length, height and L.S.A of a cuboid are 9.00 cm, 7.00 cm and 238.00 sq.cm respectively, its volume is

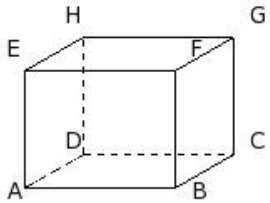

(i) 492.00 cu.cm (ii) 491.00 cu.cm (iii) 529.00 cu.cm (iv) 511.00 cu.cm (v) 504.00 cu.cm

4. Find the volume of the given object if each individual cube is 1 cu.cm

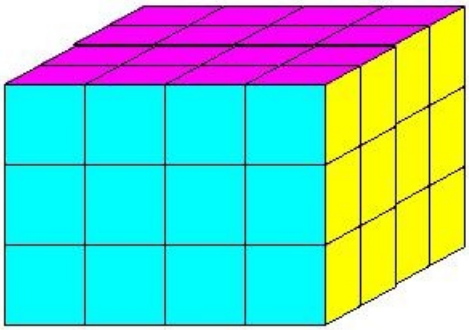

(i) 46 cu.cm (ii) 49 cu.cm (iii) 47 cu.cm (iv) 48 cu.cm (v) 50 cu.cm

5. If the length, height and volume of a cuboid are 20.00 cm, 14.00 cm and 3080.00 cu.cm respectively, its breadth is

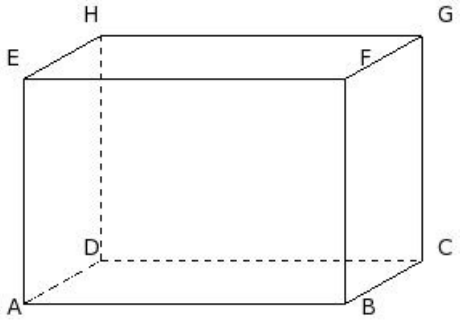

(i) 6.00 cm (ii) 14.00 cm (iii) 8.00 cm (iv) 11.00 cm (v) 16.00 cm

6. If the L.S.A of a cube is 256.00 sq.cm, its side is

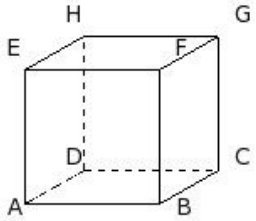

(i) 7.00 cm (ii) 8.00 cm (iii) 9.00 cm (iv) 6.00 cm (v) 10.00 cm

7. If the length, breadth and volume of a cuboid are 15.00 cm, 14.00 cm and 2100.00 cu.cm respectively, its height is

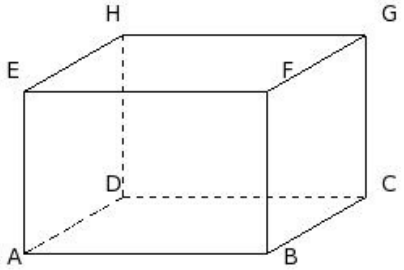

(i) 5.00 cm (ii) 15.00 cm (iii) 13.00 cm (iv) 10.00 cm (v) 7.00 cm

8. Find the volume of the given object if each individual cube is 1 cu.cm

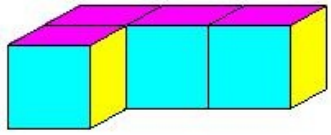

(i) 6 cu.cm (ii) 4 cu.cm (iii) 2 cu.cm (iv) 3 cu.cm (v) 5 cu.cm

9. If the breadth, height and T.S.A of a cuboid are 16.00 cm, 13.00 cm and 1460.00 sq.cm respectively, its L.S.A is

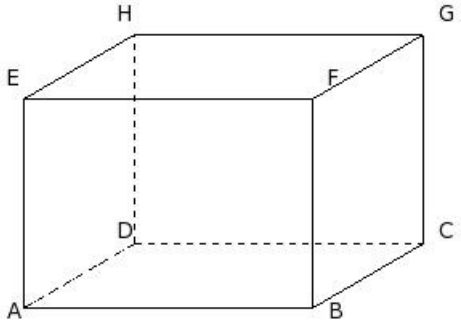

(i) 877.00 sq.cm (ii) 899.00 sq.cm (iii) 884.00 sq.cm (iv) 870.00 sq.cm (v) 896.00 sq.cm

10. If the length, breadth and L.S.A of a cuboid are 13.00 cm, 11.00 cm and 768.00 sq.cm respectively, its volume is

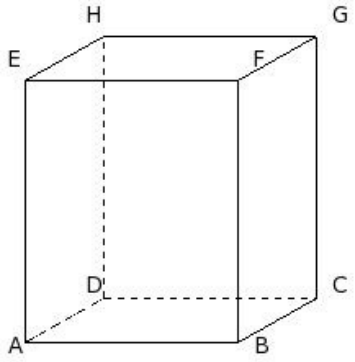

(i) 2208.00 cu.cm (ii) 2408.00 cu.cm (iii) 2038.00 cu.cm (iv) 2328.00 cu.cm (v) 2288.00 cu.cm

11. If the length, breadth and volume of a cuboid are 18.00 cm, 16.00 cm and 3456.00 cu.cm respectively, its L.S.A is

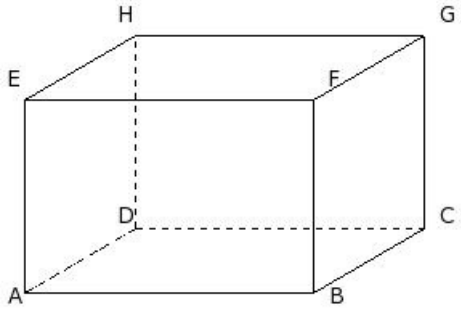

(i) 818.00 sq.cm (ii) 790.00 sq.cm (iii) 811.00 sq.cm (iv) 816.00 sq.cm (v) 834.00 sq.cm

12. If the length, height and volume of a cuboid are 15.00 cm, 7.00 cm and 630.00 cu.cm respectively, its L.S.A is

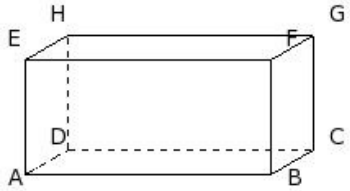

(i) 281.00 sq.cm (ii) 278.00 sq.cm (iii) 294.00 sq.cm (iv) 311.00 sq.cm (v) 312.00 sq.cm

13. If the T.S.A of a cube is 1176.00 sq.cm, its volume is

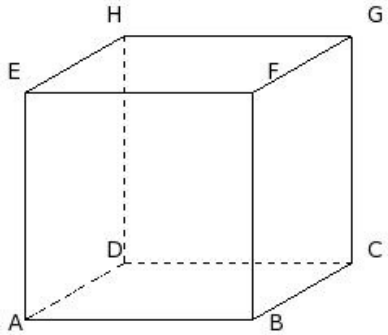

(i) 2484.00 cu.cm (ii) 2604.00 cu.cm (iii) 2914.00 cu.cm (iv) 2924.00 cu.cm (v) 2744.00 cu.cm

14. If the L.S.A of a cube is 576.00 sq.cm, its volume is

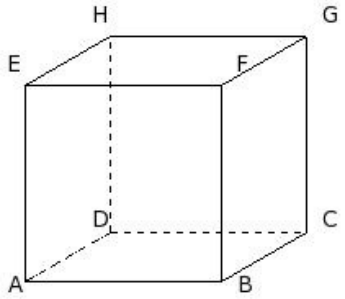

(i) 1498.00 cu.cm (ii) 1588.00 cu.cm (iii) 1728.00 cu.cm (iv) 1878.00 cu.cm (v) 1948.00 cu.cm

15. Find the volume of the given object if each individual cube is 1 cu.cm

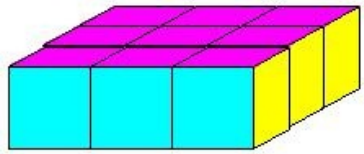

(i) 11 cu.cm (ii) 7 cu.cm (iii) 9 cu.cm (iv) 8 cu.cm (v) 10 cu.cm

16. If the length, breadth and height of a cuboid are 17.00 cm, 15.00 cm and 15.00 cm respectively, its T.S.A is

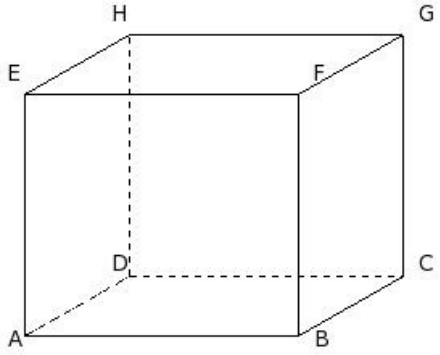

(i) 1440.00 sq.cm (ii) 1640.00 sq.cm (iii) 1230.00 sq.cm (iv) 1520.00 sq.cm (v) 1470.00 sq.cm

17. If the length, breadth and T.S.A of a cuboid are 16.00 cm, 10.00 cm and 1048.00 sq.cm respectively, its L.S.A is

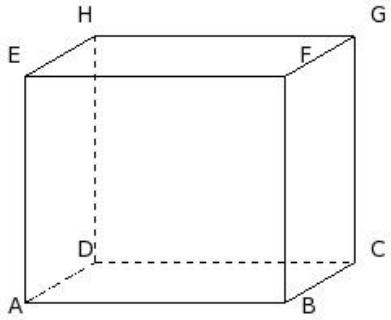

(i) 731.00 sq.cm (ii) 754.00 sq.cm (iii) 711.00 sq.cm (iv) 728.00 sq.cm (v) 723.00 sq.cm

18. If the breadth, height and volume of a cuboid are 8.00 cm, 14.00 cm and 1792.00 cu.cm respectively, its L.S.A is

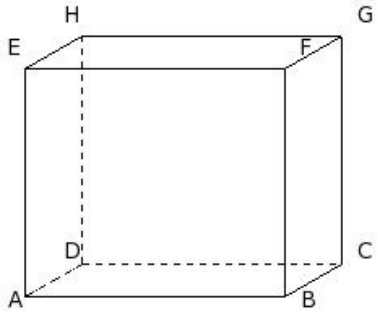

(i) 656.00 sq.cm (ii) 694.00 sq.cm (iii) 672.00 sq.cm (iv) 687.00 sq.cm

19. If the breadth, height and volume of a cuboid are 19.00 cm, 8.00 cm and 3040.00 cu.cm respectively, its T.S.A is

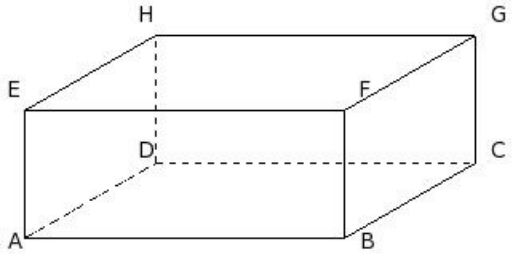

(i) 1384.00 sq.cm (ii) 1514.00 sq.cm (iii) 1244.00 sq.cm (iv) 1124.00 sq.cm

20. If the breadth, height and L.S.A of a cuboid are 15.00 cm, 14.00 cm and 868.00 sq.cm respectively, its volume is

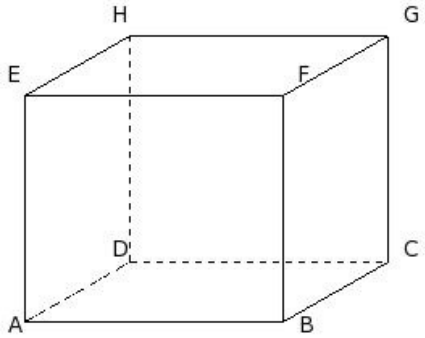

(i) 3110.00 cu.cm (ii) 3360.00 cu.cm (iii) 3540.00 cu.cm (iv) 3240.00 cu.cm (v) 3530.00 cu.cm

21. If the length, height and T.S.A of a cuboid are 15.00 cm, 12.00 cm and 846.00 sq.cm respectively, its volume is

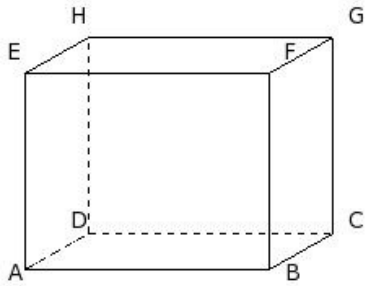

(i) 1770.00 cu.cm (ii) 1460.00 cu.cm (iii) 1490.00 cu.cm (iv) 1620.00 cu.cm (v) 1760.00 cu.cm

22. If the length, height and volume of a cuboid are 20.00 cm, 14.00 cm and 4200.00 cu.cm respectively, its T.S.A is

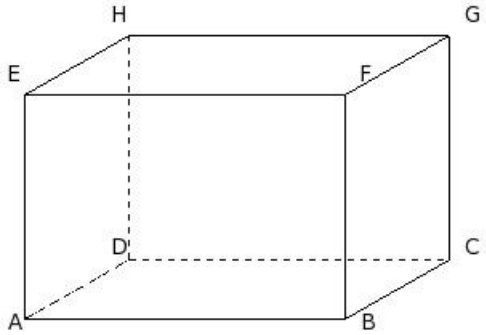

(i) 1720.00 sq.cm (ii) 1550.00 sq.cm (iii) 1330.00 sq.cm (iv) 1660.00 sq.cm (v) 1580.00 sq.cm

23. If the length, height and T.S.A of a cuboid are 15.00 cm, 17.00 cm and 1342.00 sq.cm respectively, its L.S.A is

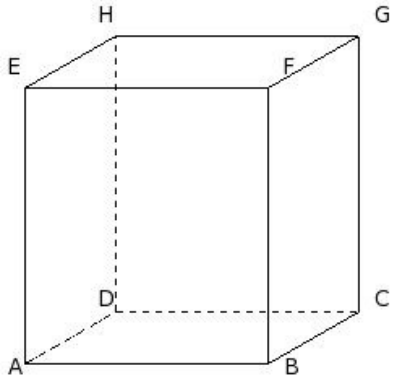

(i) 952.00 sq.cm (ii) 964.00 sq.cm (iii) 950.00 sq.cm (iv) 926.00 sq.cm (v) 979.00 sq.cm

24. If the breadth, height and T.S.A of a cuboid are 11.00 cm, 5.00 cm and 558.00 sq.cm respectively, its length is

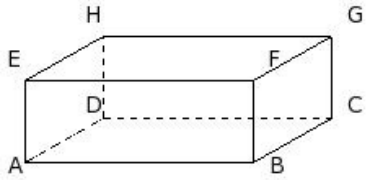

(i) 17.00 cm (ii) 19.00 cm (iii) 11.00 cm (iv) 9.00 cm (v) 14.00 cm

25. If the breadth, height and T.S.A of a cuboid are 5.00 cm, 15.00 cm and 470.00 sq.cm respectively, its volume is

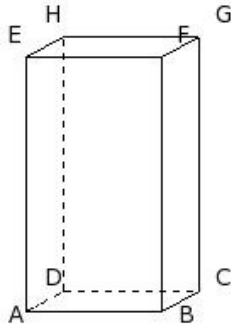

(i) 587.00 cu.cm (ii) 625.00 cu.cm (iii) 584.00 cu.cm (iv) 600.00 cu.cm (v) 602.00 cu.cm

Assignment Key

1) (i)	2) (v)	3) (v)	4) (iv)	5) (iv)	6) (ii)
7) (iv)	8) (ii)	9) (iii)	10) (v)	11) (iv)	12) (iii)
13) (v)	14) (iii)	15) (iii)	16) (v)	17) (iv)	18) (iii)
19) (i)	20) (ii)	21) (iv)	22) (v)	23) (i)	24) (v)
25) (iv)					

Copyright © Small Systems Computing Pvt. Ltd.